APPENDIX A – Truck Drawings

TRUCK DRAWING

RACK DRAWING

I/O PANEL DRAWING

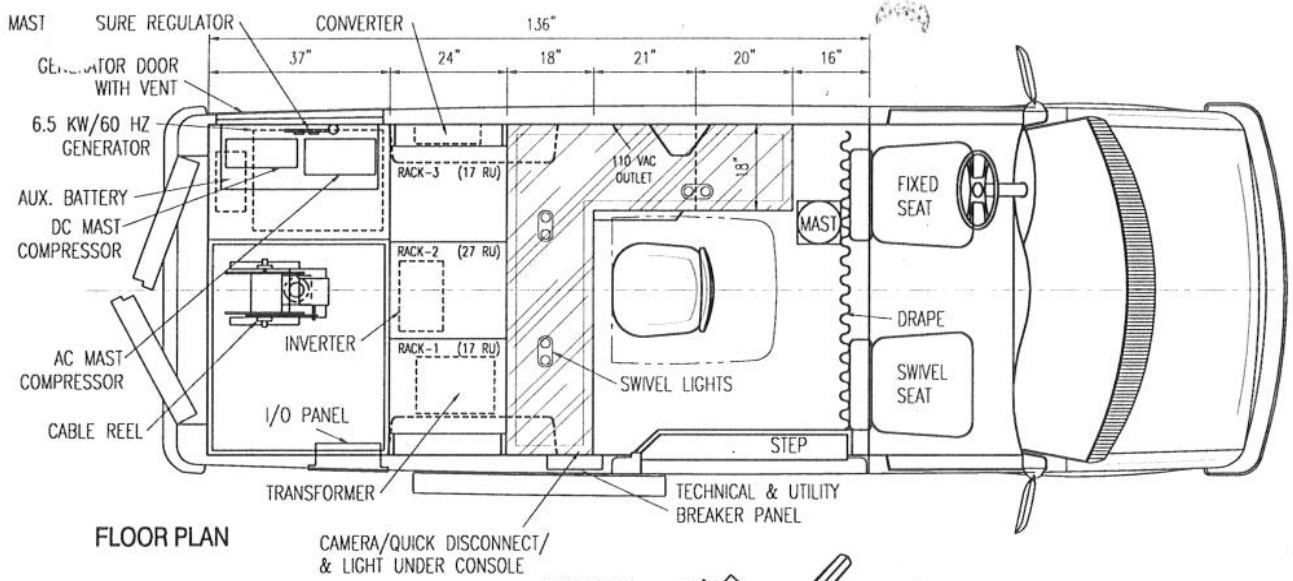

FLOOR PLAN

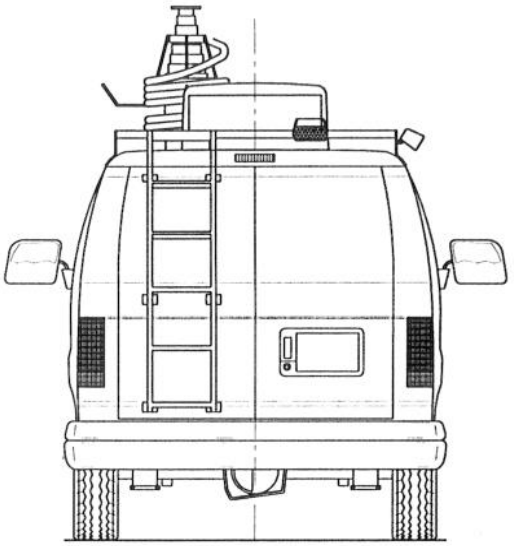

REAR ELEVATION

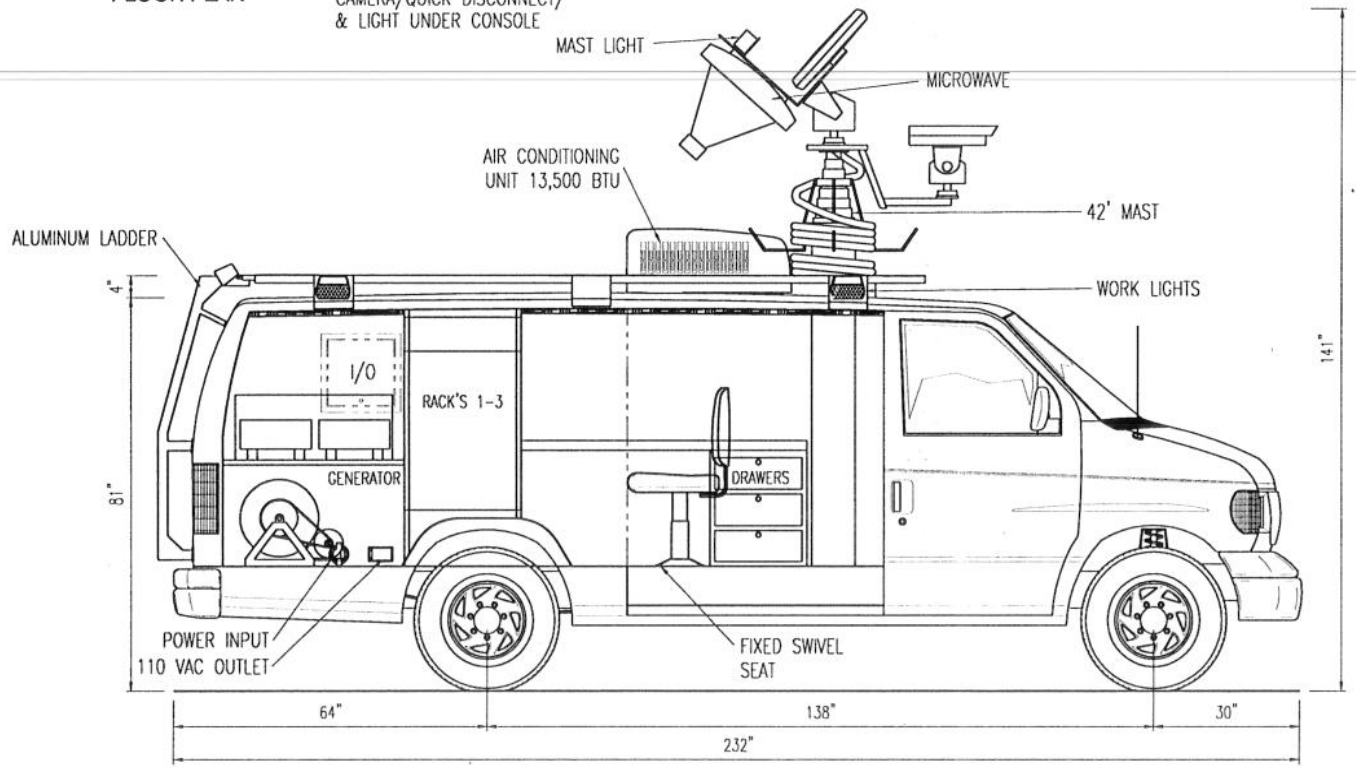

INTERIOR ELEVATION

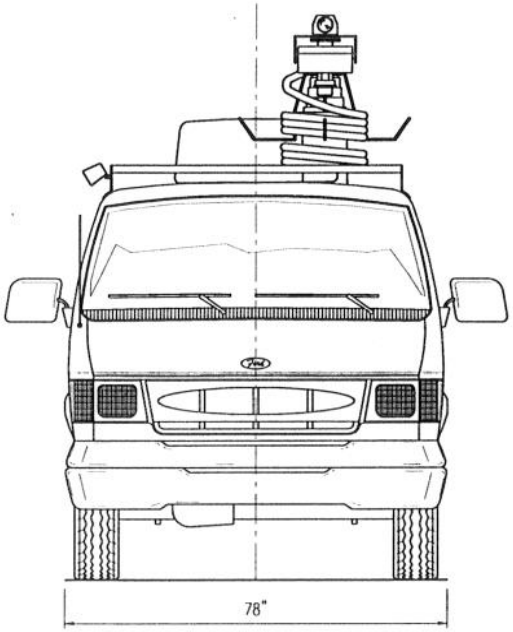

FRONT ELEVATION

C:\1Jobs\DWGS\773-KABC-TV-1\773-A11-ENG.dwg 09.11.2000

APPROVED BY:

DATE:

A

THIS DRAWING IS THE PROPERTY OF SHOOK ELECTRONICS USA AND UTILIZES PROPRIETARY DESIGNS. THIS DRAWING CANNOT BE REPRODUCED OR TRANSMITTED WITHOUT WRITTEN CONSENT FROM SHOOK ELECTRONICS USA.

SHOOK Electronics USA, Inc.
18975 Marbach Lane, Bldg 200 (210) 651-5700
San Antonio, Texas 78266 FAX: (210) 651-5220

SHEET TITLE: SHOOK MODEL A-11 ENG			SHEET NO. 1 OF 1
SCALE: 1:40	DATE: 9.11.00	DRAWN BY: RJB	
JOB NUMBER: 773	REVISION DATE: 6.30.00	CHECKED BY:	
FOR: KABC LOS ANGELES, CALIFORNIA		DRAWING NUMBER:	

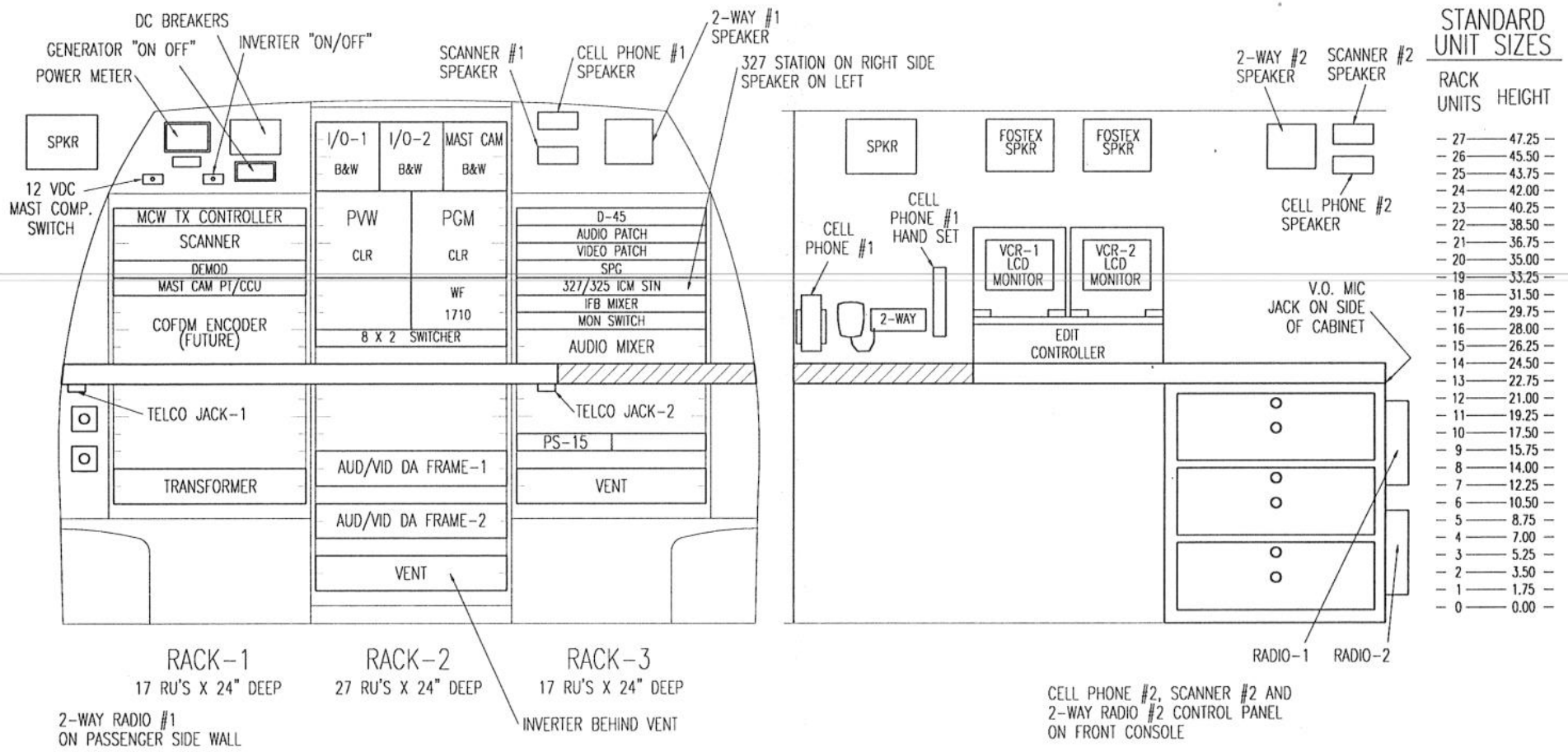

C:\1Jobs\DWGS\773-KABC-TV-1\KABC RACKS Rev 9-28-00.dwg 09.28.2000

APPROVED BY:

DATE:

A

THIS DRAWING IS THE PROPERTY OF SHOOK ELECTRONICS USA AND UTILIZES PROPRIETARY DESIGNS. THIS DRAWING CANNOT BE REPRODUCED OR TRANSMITTED WITHOUT WRITTEN CONSENT FROM SHOOK ELECTRONICS USA.

SHOOK Electronics USA, Inc.
18975 Marbach Lane, Bldg 200 (210) 651-5700
San Antonio, Texas 78266 FAX: (210) 651-5220

SHEET TITLE: KABC RACK LAYOUT			SHEET NO. 1 OF 1
SCALE: 1:16	DATE: 06.14.00	DRAWN BY: TR	
JOB NUMBER: 773	REVISION DATE: 9.28.00	CHECKED BY:	
FOR: KABC-TV Los Angeles, CA.		DRAWING NUMBER:	

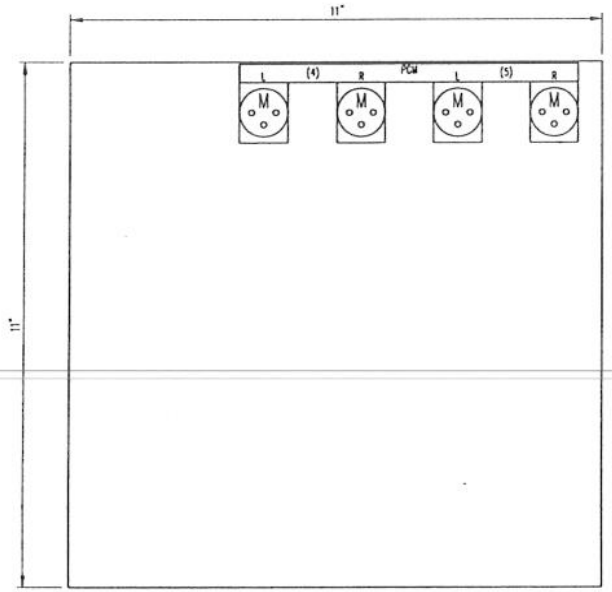

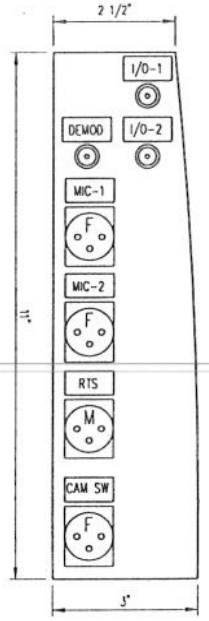

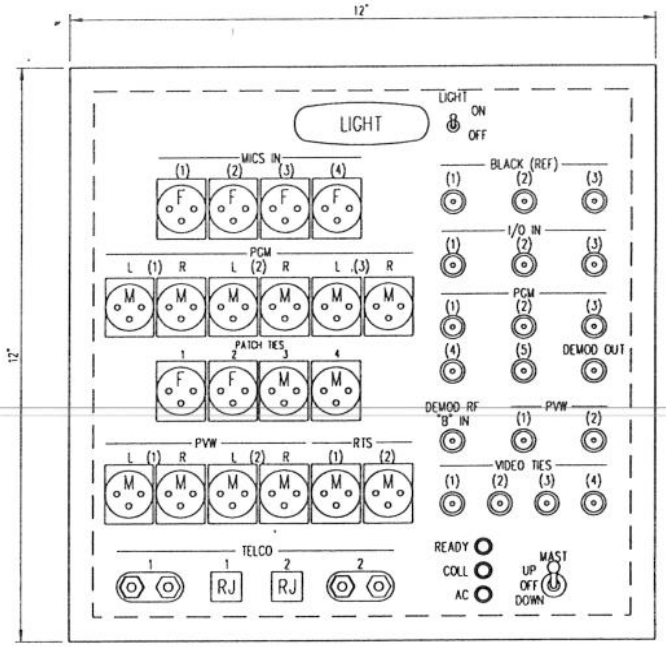

I/O PANEL BOX

INSIDE OF VEHICLE

LEGEND

M	MALE XLR		BNC (FEMALE)	RJ	RJ-45
F	FEMALE XLR		SWITCH		BINDING POST
			LED		

C:\Jobs\DWGS\773-KABC-TV-1\KABC-1 IO-PANEL Rev 7-25-00.dwg 07.25.2000

APPROVED BY:

DATE:

A

THIS DRAWING IS THE PROPERTY OF SHOOK ELECTRONICS USA AND UTILIZES PROPRIETARY DESIGNS. THIS DRAWING CANNOT BE REPRODUCED OR TRANSMITTED WITHOUT WRITTEN CONSENT FROM SHOOK ELECTRONICS USA.

SHOOK Electronics USA, Inc.
18975 Marbach Lane, Bldg 200 (210) 651-5700
San Antonio, Texas 78266 FAX: (210) 651-5220

SHEET TITLE: KABC I/O PANEL			SHEET NO. 1 OF 1
SCALE: 1:4	DATE: 07.05.00	DRAWN BY: TR	
JOB NUMBER: 773	REVISION DATE: 7.25.00	CHECKED BY:	
FOR: KABC-TV LOS ANGELES, CALIFORNIA		DRAWING NUMBER:	

APPENDIX B - System Video

VIDEO PATCH PANEL DIAGRAMS

VIDEO FLOW DRAWING

VIDEO WIRE LIST

VIDEO PATCH PANEL

DESIGNATION	I/O 1 IN	I/O 2 IN	I/O 3 IN	VDA-7 BLK 8OUT	VDA-1 I/O-1 1OUT	VDA-2 I/O-2 1OUT	VDA-3 I/O-3 1OUT	MAST CAM OUT	VCR 1 OUT	VCR 2 OUT	SPG BARS OUT	SWR PGM OUT	SPG INS OUT	SWR PVW OUT-1	VDA-4 PGM 1OUT	VDA-5 PVW 1OUT	VDA-4 PGM 2OUT	VDA-5 PVW 2OUT	VDA-4 PGM 3OUT	VDA-5 PVW 3OUT	VDA-1 I/O-1 2OUT	SPG BLK OUT	DEMOD (AIR) OUT		I/O TIE 1	I/O TIE 2
CABLE # / JACK #	A01	A02	A03	A04	A05	A06	A07	A08	A09	A10	A11	A12	A13	A14	A15	A16	A17	A18	A19	A20	A21	A22	A23	A24	A25	A26
	1	2	3	4	5	6	7	8	9	10	11	12	13	14	15	16	17	18	19	20	21	22	23	24	25	26
ROW A																										
ROW B																										
JACK #	1	2	3	4	5	6	7	8	9	10	11	12	13	14	15	16	17	18	19	20	21	22	23	24	25	26
CABLE #	B01	B02	B03	B04	B05	B06	B07	B08	B09	B10	B11	B12	B13	B14	B15	B16	B17	B18	B19	B20	B21	B22	B23	B24	B25	B26
DESIGNATION	VDA-1 IN I/O-1	VDA-2 IN I/O-2	VDA-3 IN I/O-3	SWR 1 IN	SWR 2 IN	SWR 3 IN	SWR 4 IN	SWR 5 IN	SWR 6 IN	SWR 7 IN	SWR 8 IN	SPG INS IN	VDA-4 PGM IN	VDA-5 PVW IN	PGM MON B-IN	PVW MON A-IN	MCWV 2 Ghz IN	WFM IN B	MCWV 7 Ghz IN	VCR 1 IN	SPG G/L IN	VDA-7 BLK IN	VDA-6 DEMOD IN	VCR 2 IN	I/O TIE 3	I/O TIE 4

OUTPUT TOP ROW

NORMAL

INPUT BOTTOM ROW

C:\1Jobs\DWGS\773-KABC-TV-1\KABC-1 VIDEO PATCH Rev 8-3-00.dwg 08.03.2000

APPROVED BY:

DATE:

A

THIS DRAWING IS THE PROPERTY OF SHOOK ELECTRONICS USA AND UTILIZES PROPRIETARY DESIGNS. THIS DRAWING CANNOT BE REPRODUCED OR TRANSMITTED WITHOUT WRITTEN CONSENT FROM SHOOK ELECTRONICS USA.

SHOOK Electronics USA, Inc.
18975 Marbach Lane, Bldg 200
San Antonio, Texas 78266
(210) 651-5700
FAX: (210) 651-5220

SHEET TITLE: KABC-1 VIDEO PATCH PANEL

SCALE: NTS | DATE: 07.03.00 | DRAWN BY: TR

JOB NUMBER: 773 | REVISION DATE: 8.3.00 | CHECKED BY:

FOR: KABC-TV
LOS ANGELES, CALIFORNIA

DRAWING NUMBER:

SHEET NO. 1 OF 1

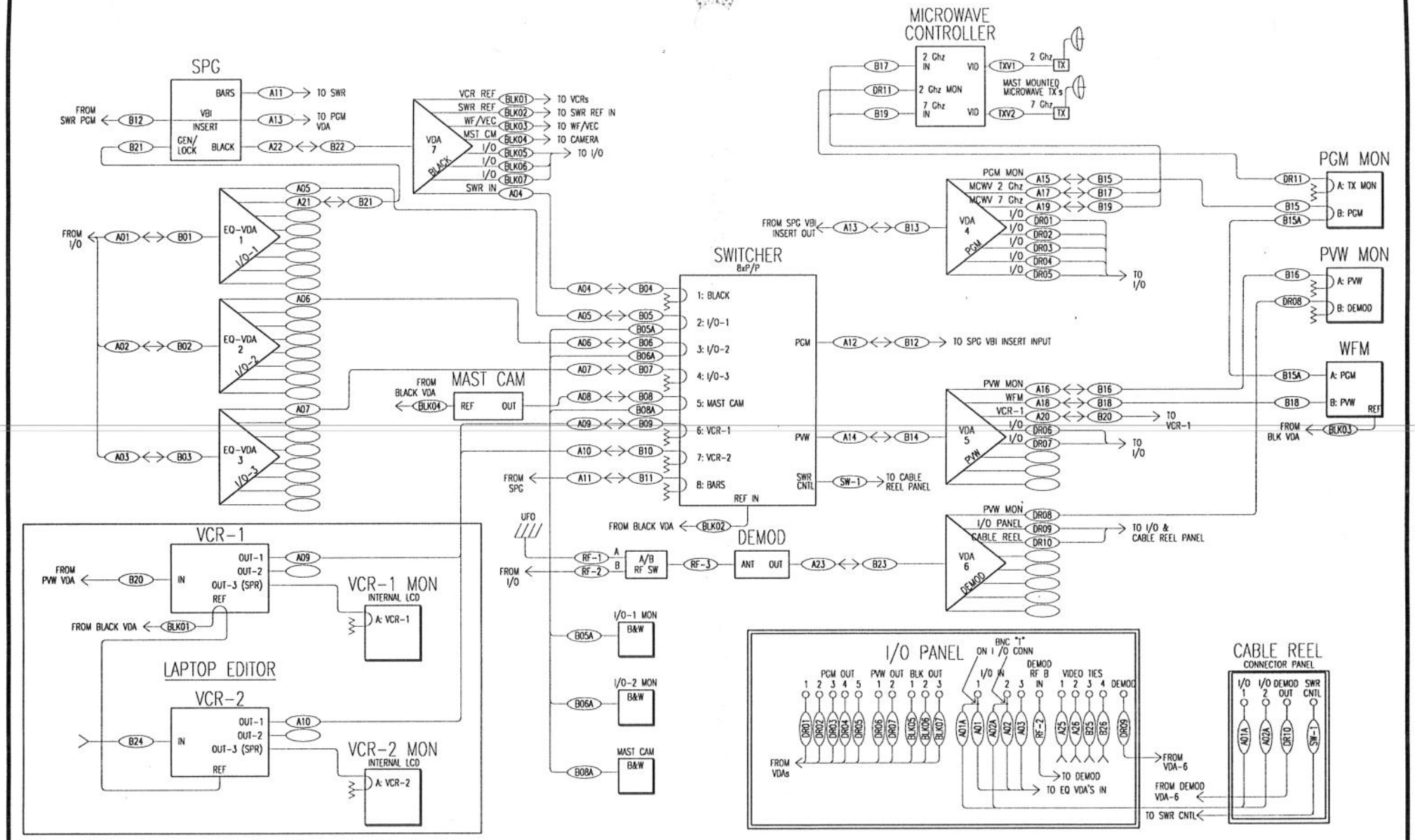

C:\1Jobs\DWGS\773-KABC-TV-1\KABC-1 VID-FLW REV 8-3-00.dwg 08.03.2000

APPROVED BY:

DATE:

A

THIS DRAWING IS THE PROPERTY OF SHOOK ELECTRONICS USA AND UTILIZES PROPRIETARY DESIGNS. THIS DRAWING CANNOT BE REPRODUCED OR TRANSMITTED WITHOUT WRITTEN CONSENT FROM SHOOK ELECTRONICS USA.

SHOOK Electronics USA, Inc.
18975 Marbach Lane, Bldg 200
San Antonio, Texas 78266
(210) 651-5700
FAX: (210) 651-5220

SHEET TITLE: KABC VIDEO FLOW DIAGRAM			SHEET NO. 1 OF 1
SCALE: NTS	DATE: 07.03.00	DRAWN BY: TR	
JOB NUMBER: 773	REVISION DATE: 8.3.00	CHECKED BY:	
FOR: KABC-TV LOS ANGELES, CALIFORNIA		DRAWING NUMBER:	

Cable #	From	Rack	To	Rack
A01	I/O Panel: I/O-1 In		Patch A01	
A01A	I/O Panel: I/O-1 In		Cable Reel Panel: I/O-1	
A02	I/O Panel: I/O-2 In		Patch A02	
A02A	I/O Panel: I/O-1 In		Cable Reel Panel: I/O-2	
A03	I/O Panel: I/O-3 In		Patch A03	
A04	VDA-7: Black Out-8		Patch A04	
A05	VDA-1: I/O-1 Out-1		Patch A05	
A06	VDA-2: I/O-1 Out-1		Patch A06	
A07	VDA-3: I/O-1 Out-1		Patch A07	
A08	Mast Cam: out		Patch A08	
A09	VCR-1: Out-1		Patch A09	
A10	VCR-2: Out-1		Patch A10	
A11	SPG: Bars		Patch A11	
A12	Switcher: PGM Out		Patch A12	
A13	SPG: Vertical Insert Out		Patch A13	
A14	Switcher: PVW Out		Patch A14	
A15	VDA-4: PGM Out-1		Patch A15	
A16	VDA-5: PVW Out-1		Patch A16	
A17	VDA-4: PGM Out-2		Patch A17	
A18	VDA-5: PVW Out-2		Patch A18	
A19	VDA-4: PGM Out-3		Patch A19	
A20	VDA-5: PVW Out-3		Patch A20	
A21	VDA-1: I/O-1 Out-2		Patch A21	
A22	SPG: Black Out		Patch A22	
A23	Demod: Out		Patch A23	
A24			Patch A24	
A25	I/O Panel: Tie-1		Patch A25	
A26	I/O Panel: Tie-2		Patch A26	
B01	Patch B01		VDA-1: In	
B02	Patch B02		VDA-2: In	
B03	Patch B03		VDA-3: In	
B04	Patch B04		Switcher: In-1, Black	
B05	Patch B05		Switcher: In-2, I/O-1	
B05A	Switcher: In-2, I/O-1 Loop		Monitor: I/O-1	
B06	Patch B06		Switcher: In-3, I/O-2	
B06A	Switcher: In-3, I/O-2 Loop		Monitor: I/O-2	
B07	Patch B07		Switcher: In-4, I/O-3	
B08	Patch B08		Switcher: In-5, Mast Cam	
B08A	Switcher: In-5, Mast Cam Loop		Monitor: Mast Cam	
B09	Patch B09		Switcher: In-6, VCR-1	
B10	Patch B10		Switcher: In-7, VCR-2	
B11	Patch B11		Switcher: In-8, Bars	
B12	Patch B12		SPG: Vertical Insert In	
B13	Patch B13		VDA-4: In	
B14	Patch B14		VDA-5: In	
B15	Patch B15		PGM Monitor: In-B PGM	
B15A	PGM Monitor: In-B PGM Loop		WFM: In-A PGM	

Cable #	From	Rack	To	Rack
B16	Patch B16		PVW Monitor: In-A PVW	
B17	Patch B17		Microwave Cont. 2 Ghz In	
B18	Patch B18		WFM: In-B PVW	
B19	Patch B19		Microwave Cont. 7 Ghz In	
B20	Patch B20		VCR-1: In	
B21	Patch B21		SPG: GEN/LOCK	
B22	Patch B22		VDA-7: In	
B23	Patch B23		VDA-6: In	
B24	Patch B24		VCR-2: In	
B25	Patch B25		I/O Panel: Tie-3	
B26	Patch B26		I/O Panel: Tie-4	
DR01	VDA-4: PGM Out-4		I/O Panel: PGM Out-1	
DR02	VDA-4: PGM Out-5		I/O Panel: PGM Out-2	
DR03	VDA-4: PGM Out-6		I/O Panel: PGM Out-3	
DR04	VDA-4: PGM Out-7		I/O Panel: PGM Out-4	
DR05	VDA-4: PGM Out-8		I/O Panel: PGM Out-5	
DR06	VDA-5: PVW Out-4		I/O Panel: PVW Out-1	
DR07	VDA-5: PVW Out-5		I/O Panel: PVW Out-2	
DR08	VDA-6: Demod Out-1		Monitor: PVW In-B Demod	
DR09	VDA-6: Demod Out-2		I/O Panel: Demod	
DR10	VDA-6: Demod Out-3		Cable Reel Panel: Demod	
DR11	Microwave Cont. 2 Ghz Mon		Monitor: PGM In-A TX MON	
BLK-1	VDA-7: Black Out-1		VCR-1: REF	
BLK-1A	VCR-1: REF Loop		VCR-2: REF	
BLK-2	VDA-7: Black Out-2		Switcher: REF	
BLK-3	VDA-7: Black Out-3		WFM: REF	
BLK-4	VDA-7: Black Out-4		MAST CAMERA: REF	
BLK-5	VDA-7: Black Out-5		I/O Panel: Black Out-1	
BLK-6	VDA-7: Black Out-6		I/O Panel: Black Out-2	
BLK-7	VDA-7: Black Out-7		I/O Panel: Black Out-3	
RF-1	UFO Antenna		RF A/B Switch: A	
RF-2	I/O Panel: Demod RF In-B		RF A/B Switch: B	
RF-3	RF A/B Switch out		Demod: Antenna In	
TXV1	Microwave Cont. Video Out 2 Ghz		2 Ghz transmitter	
TXV2	Microwave Cont. Video Out 7 Ghz		7 Ghz transmitter (mast mounted tx's)	
SW-1	Switcher: Control		Cabel Reel Panel: Swr Control	

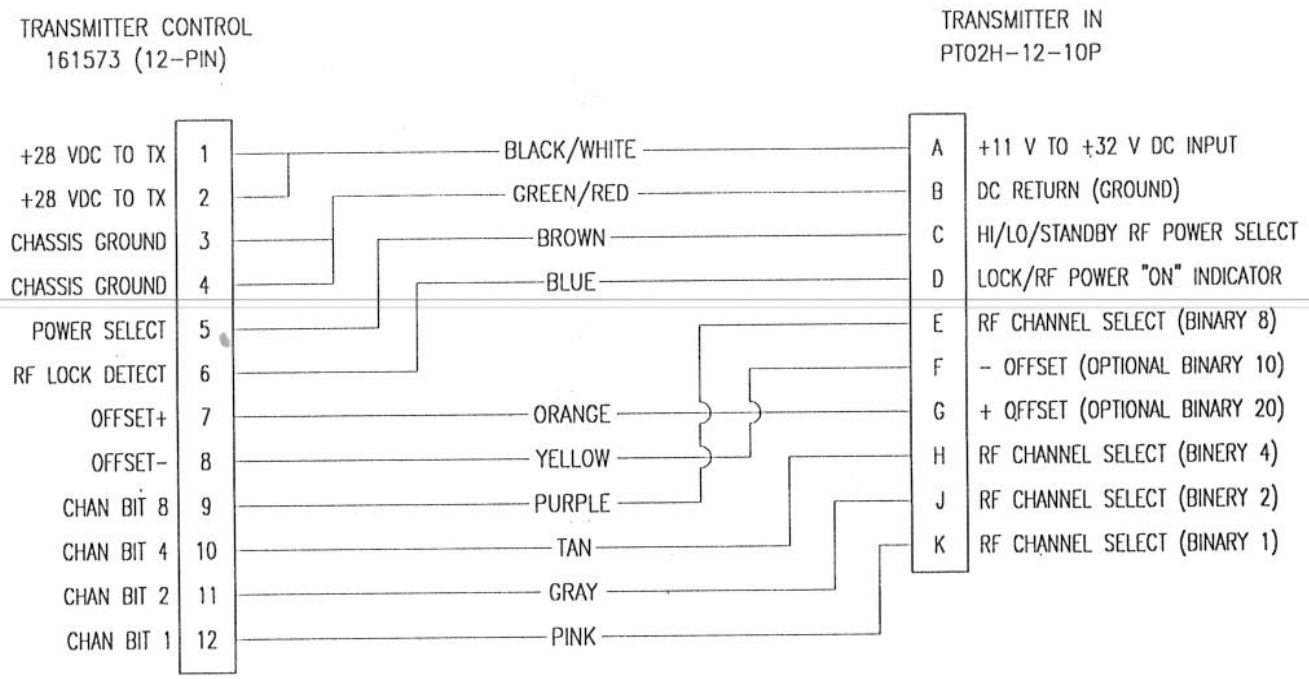

C:\1Jobs\DWGS\773-KABC-TV-1\TRANS-CABLE.dwg 09.19.2000

APPROVED BY:

DATE:

A

THIS DRAWING IS THE PROPERTY OF SHOOK ELECTRONICS USA AND UTILIZES PROPRIETARY DESIGNS. THIS DRAWING CANNOT BE REPRODUCED OR TRANSMITTED WITHOUT WRITTEN CONSENT FROM SHOOK ELECTRONICS USA.

SHOOK Electronics USA, Inc.
18975 Marbach Lane, Bldg 200 (210) 651-5700
San Antonio, Texas 78266 FAX: (210) 651-5220

SHEET TITLE: TRANSMITTER CONTROL CABLE			SHEET NO. 1 OF 1
SCALE: NTS	DATE: 9.19.00	DRAWN BY: RJB	
JOB NUMBER: 773/774	REVISION DATE:	CHECKED BY:	
FOR: KABC LOS ANGELES, CALIFORNIA		DRAWING NUMBER:	

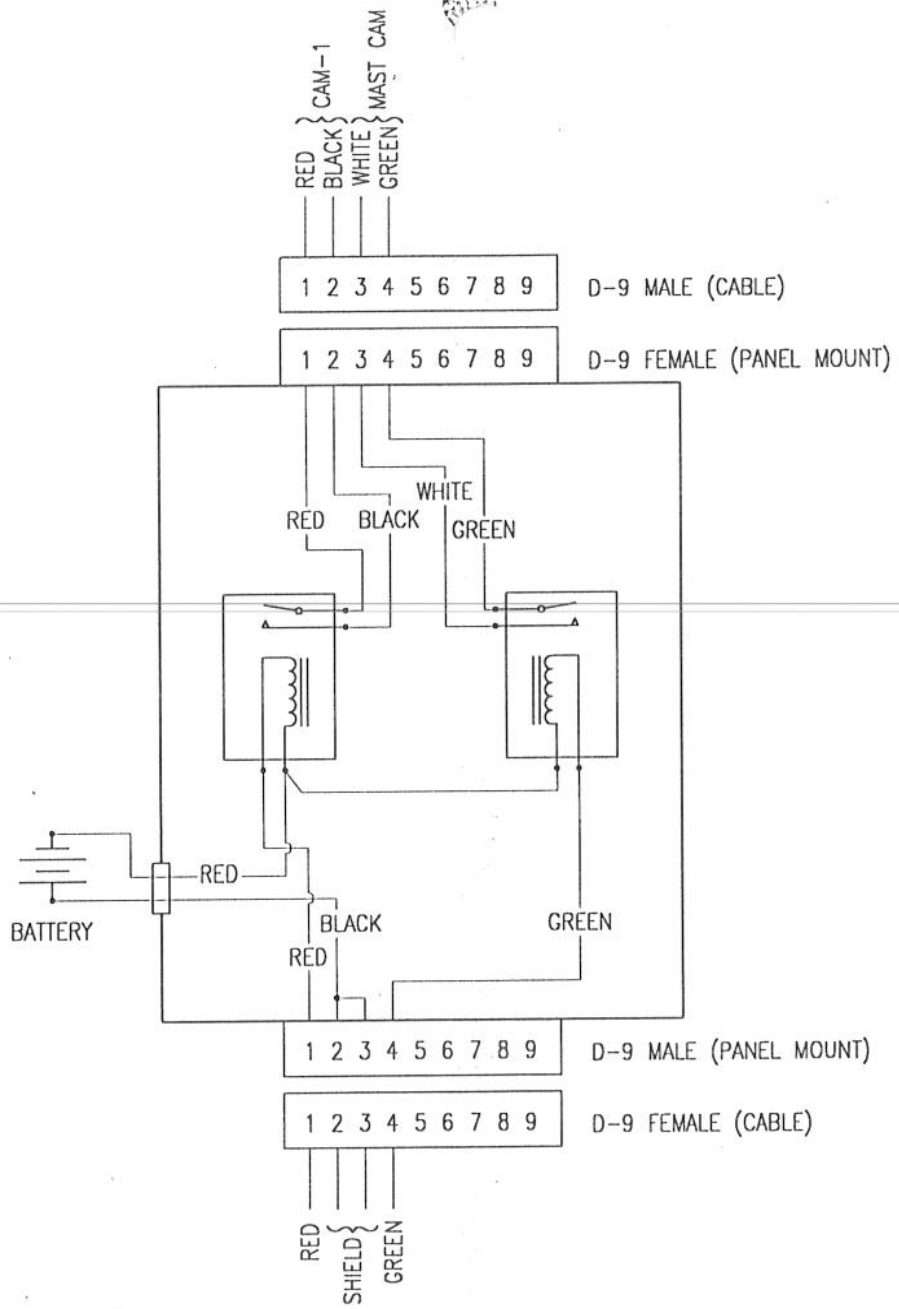

C:\1Jobs\DWGS\773-KABC-TV-1\REMOTE-CAM-SW.dwg 08.07.2000

APPROVED BY:

DATE:

A

THIS DRAWING IS THE PROPERTY OF SHOOK ELECTRONICS USA AND UTILIZES PROPRIETARY DESIGNS. THIS DRAWING CANNOT BE REPRODUCED OR TRANSMITTED WITHOUT WRITTEN CONSENT FROM SHOOK ELECTRONICS USA.

SHOOK Electronics USA, Inc.
18975 Marbach Lane, Bldg 200 (210) 651-5700
San Antonio, Texas 78266 FAX: (210) 651-5220

SHEET TITLE: REMOTE CAMERA SWITCH			SHEET NO.
SCALE: NTS	DATE: 7.25.00	DRAWN BY: RJB	1
JOB NUMBER: 773/774	REVISION DATE:	CHECKED BY:	
FOR: KABC LOS ANGELES, CALIFORNIA		DRAWING NUMBER:	of 1

APPENDIX C - System Audio

BASIC AUDIO HOOK UP AND GROUNDING PROCEDURES

AUDIO CONNECTOR WIRING PINS

AUDIO PATCH PANEL DIAGRAMS

AUDIO FLOW DRAWINGS

AUDIO WIRE LIST

BASIC AUDIO HOOK UP AND GROUNDING PROCEDURES

Interconnection

Shook Electronics USA uses a voltage source balanced interconnect system in all of our audio installations. The voltage source balanced interconnect system is really the only viable alternative for a professional audio system of the 1990's. The 600 ohm power matched system, developed in the days of tube equipment as a way to achieve maximum signal to noise ratio, is on its way out. With modern operational amplifier (op amp) technology it is no longer necessary, nor even desirable, to terminate audio lines with a "matched" low impedance.

The foil shielded audio cable that we use today does not have a characteristic line impedance of 600 ohms but rather below 100 ohms. The true audio transmission line exists only at the telephone company with cable, the length of which approaches 1/4 wavelength at the highest frequency of interest, i.e. 2.33 miles @ 20 khz, assuming a propagation velocity factor of 1.

The voltage source interconnect system, with low (i.e. 60 ohm) source impedance and a relatively high (i.e. 10k - 100k ohm) input impedance, has become the accepted practice. A 60 ohm output impedance has been found to be the optimum drive Z for today's foil shielded cables.

The advantages are:

1. Less power draw from the source equipment.(No 600 ohm resistor.)
2. Lower distortion (from low drive current) generated by the output stage doing the driving.
3. Lower (14db lower) noise pickup by interconnect cables due to the lower source impedance.
4. Most of all, 5 to 10 times the cable length that may be driven for a predetermined high frequency system cutoff.

Lower source impedance will result in a high frequency peaking because of series inductance in the foil shielded cable. Another benefit of the 60 ohm output Z is that there is only a 0.8db amplitude difference between a bridging input and any residual 600 ohm inputs. The advantage of this may not seem immediately obvious, but let's consider a not unusual TV situation where the normal system reference level (0VU) is really +8dbv, where 0dbv is a voltage reference of 0.7746 volts. Next, we must realize that the normal peak to average ratio (crest factor) of most audio is not 8db, but in fact may be as high as 16db on very percussive material. Now, let's assume that we are feeding a bridging input from a 600 ohm system (the output voltage will be 6db higher without a 600 ohm load). Now let's add up our levels: +8dbv (system average) + 16db (peak to average ratio) + 6db (for no termination) = +30dbv peak output level. When you understand that a unity gain differential (op amp) input stage running from +/- 15 volt supplies clips at about +22dbv you begin to see the need to reduce that last 6db term.

If we adopt the following rules for the interconnection of audio equipment, hum free high quality audio can almost always be achieved the first time around.

1. All equipment must have high impedance balanced inputs. This is absolutely necessary, as we have just discussed, to reject the residual power line related voltage differences between pieces of equipment. For equipment that does not have balanced inputs from the factory, Shook suggests the use of a high quality interface such as the Radio Design Labs STA-1.

2. All equipment should have balanced low impedance outputs of 100 ohms or less (60 ohms is preferred). If the equipment does not have balanced outputs, Shook suggests a high quality interface such as the Radio Design Labs STA-1.

3. Connect all the audio cable shields to form a "star" or single point ground system. The hub of the star is usually the audio patch panels or the audio mixing console (only one is used). The shield is floated at the input to all balanced inputs. The shield is connected to the balanced outputs. In this manner ground loops are almost impossible to occur. In other words, the shields are floated at the balanced inputs of the tape machines and other equipment. The only exceptions to this rule are on unbalanced inputs such as limiters, SFX units, etc. where the shield must be connected as part of the audio path; the shields on the inputs to the monitor amps, which must sometimes be driven by

unbalanced output devices; microphone level inputs where the shield is necessary because of the low level audio signal; and, of course, the phantom power supply return (on microphones that require it).

References:
A Clean Audio Installation Guide, Allen H. Burdick
Handbook of Sound Engineers, The New Audio Cyclopedia, Glen Ballou
Voltage Transmission For Audio Systems, Richard L. Hess
Sound System Design, Don & Carolyn Davis
Grounding & Shielding Techniques, Thomas M. Hay

Audio Connector Wiring Pins

Audio XLR's (A3F & A3M)

Pin 1 - GND (Shield)
Pin 2 - (+) (Red)
Pin 3 - (-) (Black)

RTS Intercom XLR's (A3M)

Pin 1 - GND (Shield)
Pin 2 - CH-1 Audio & Power (Red)
Pin 3 - CH-2 Audio (Black)

Studio Technologies IFB XLR's (A3F & A3M)

Pin 1 - GND (Shield)
Pin 2 - Power & Interrupt (Red)
Pin 3 - Non-Interrupt (Black)

RTS BP-325 Belt Pack with TELEXBEYER Headset Connector (A5M) Studio Tech Beltpack

Pin 1 - Mic (-) (Shield)
Pin 2 - Mic (+) (Green/Yellow)
Pin 3 - Headset (+) (Red/Orange)
Pin 4 - Headset (-) (Brown/Blue)
Pin 5 - Not Used

AUDIO PATCH PANEL

DESIGNATION	I/O MIC 1	I/O MIC 2	I/O MIC 3	I/O MIC 4	VCR-1 CH-1 OUT	VCR-1 CH-2 OUT	VCR-2 CH-1 OUT	VCR-2 CH-2 OUT	MIX AUX 1	MIX AUX 2	MIX OUT 1-L	MIX OUT 1-R	VCR-1 CH-1 OUT	VCR-1 CH-2 OUT	VCR-2 CH-1 OUT	VCR-2 CH-2 OUT	MIX OSC L-OUT	MIX OSC R-OUT	MIX OUT 2-L	MIX OUT 2-R	SWR PVW L-OUT	SWR PVW R-OUT	ADA-1 PGM 1OUT	ADA-2 PGM 1OUT	ADA-3 PVW 1OUT	ADA-4 PVW 1OUT	IFB MXR OUT	AUX SUM OUT	DEMOD L OUT	DEMOD R OUT	I/O TIE 1	I/O TIE 2
CABLE # / JACK #	A01	A02	A03	A04	A05	A06	A07	A08	A09	A10	A11	A12	A13	A14	A15	A16	A17	A18	A19	A20	A21	A22	A23	A24	A25	A26	A27	A28	A29	A30	A31	A32
	1	2	3	4	5	6	7	8	9	10	11	12	13	14	15	16	17	18	19	20	21	22	23	24	25	26	27	28	29	30	31	32
ROW A																																
ROW B																																
JACK # / CABLE #	1	2	3	4	5	6	7	8	9	10	11	12	13	14	15	16	17	18	19	20	21	22	23	24	25	26	27	28	29	30	31	32
	B01	B02	B03	B04	B05	B06	B07	B08	B09	B10	B11	B12	B13	B14	B15	B16	B17	B18	B19	B20	B21	B22	B23	B24	B25	B26	B27	B28	B29	B30	B31	B32
DESIGNATION	MIX MIC IN 1	MIX MIC IN 2	MIX MIC IN 3	MIX MIC IN 4	MIX STR-1 IN L	MIX STR-1 IN R	MIX STR-2 IN L	MIX STR-2 IN R	SWR IN 1-L	SWR IN 1-R	SWR IN 2-5 L	SWR IN 2-5 R	SWR IN 6-L	SWR IN 6-R	SWR IN 7-L	SWR IN 7-R	SWR IN 8-L	SWR IN 8-R	ADA-1 PGM L IN	ADA-2 PGM R IN	ADA-3 PVW L IN	ADA-4 PVW R-IN	MCWV 2 Ghz 1-IN	MCWV 7 Ghz 2-IN	VCR-1 CH-1 IN	VCR-1 CH-2 IN	PS15 PGM IN	IFB MXR 4-IN	VCR-2 CH-1 IN	VCR-2 CH-2 IN	I/O TIE 3	I/O TIE 4

OUTPUT TOP ROW

NORMAL

INPUT BOTTOM ROW

C:\1Jobs\DWGS\773-KABC-TV-1\KABC-1 AUDIO PATCH Rev 7-2000.dwg 07.20.2000

APPROVED BY:

DATE:

A

THIS DRAWING IS THE PROPERTY OF SHOOK ELECTRONICS USA AND UTILIZES PROPRIETARY DESIGNS. THIS DRAWING CANNOT BE REPRODUCED OR TRANSMITTED WITHOUT WRITTEN CONSENT FROM SHOOK ELECTRONICS USA.

SHOOK Electronics USA, Inc.
18975 Marbach Lane, Bldg 200 (210) 651-5700
San Antonio, Texas 78266 FAX: (210) 651-5220

SHEET TITLE: KABC AUDIO PATCH PANEL Rev 09.18.00			SHEET NO. 1 OF 1
SCALE: NTS	DATE: 07.05.00	DRAWN BY: TR	
JOB NUMBER: 773	REVISION DATE: 09.18.00	CHECKED BY:	
FOR: KABC-TV LOS ANGELES, CALIFORNIA		DRAWING NUMBER:	

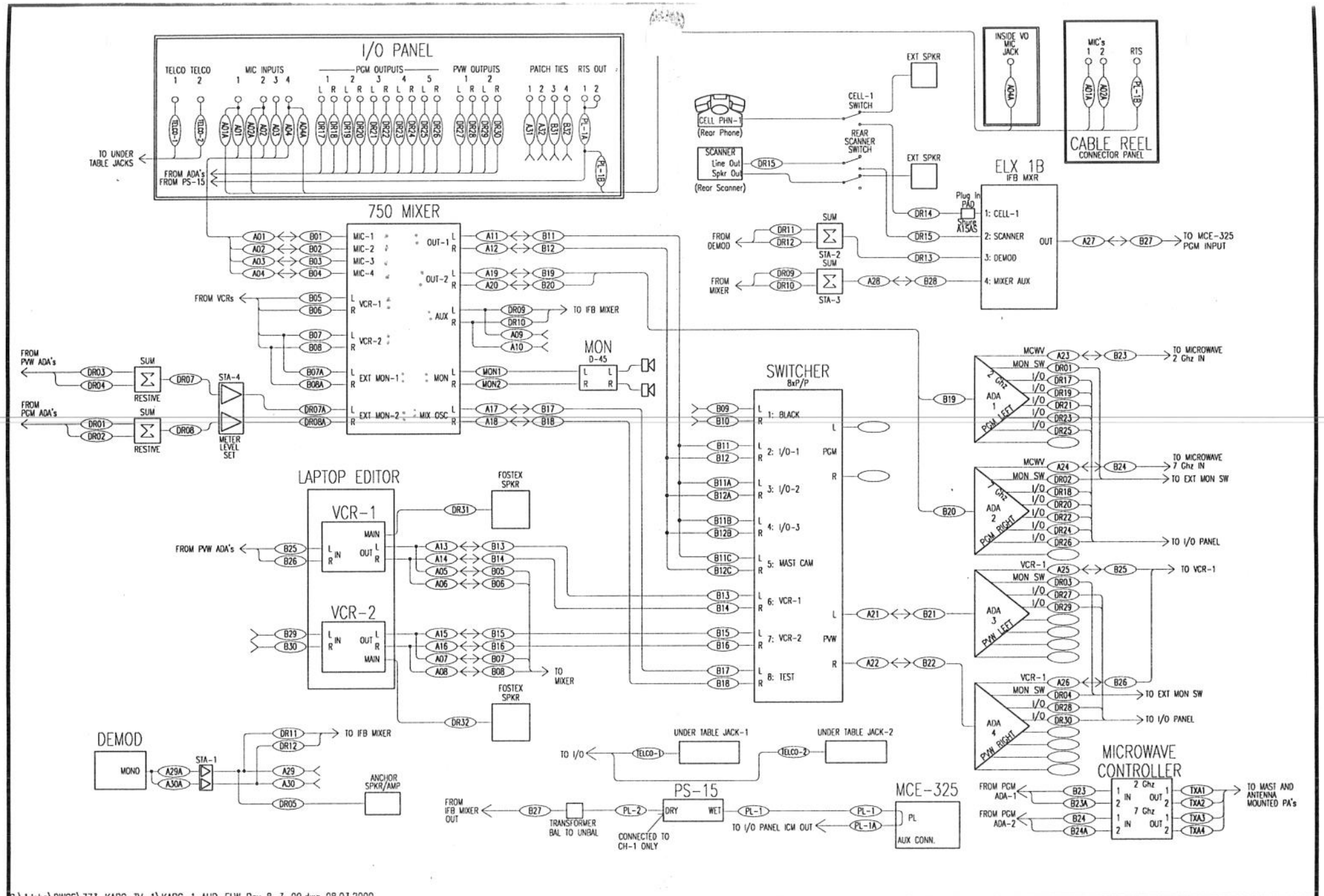

C:\1Jobs\DWGS\773-KABC-TV-1\KABC-1 AUD-FLW Rev 8-3-00.dwg 08.03.2000

APPROVED BY:

DATE:

A

THIS DRAWING IS THE PROPERTY OF SHOOK ELECTRONICS USA AND UTILIZES PROPRIETARY DESIGNS. THIS DRAWING CANNOT BE REPRODUCED OR TRANSMITTED WITHOUT WRITTEN CONSENT FROM SHOOK ELECTRONICS USA.

SHOOK Electronics USA, Inc.
18975 Morbach Lane, Bldg 200 (210) 651-5700
San Antonio, Texas 78266 FAX: (210) 651-5220

SHEET TITLE: KABC AUDIO FLOW DIAGRAM Rev 09.20.00

SCALE: NTS	DATE: 07.03.00	DRAWN BY: TR
JOB NUMBER: 773	REVISION DATE: 09.20.00	CHECKED BY:
FOR: KABC-TV LOS ANGELES, CALIFORNIA		DRAWING NUMBER:

SHEET NO. 1 OF 1

Cable #	From	Rack	To	Rack
A01	I/O Panel: MIC-1 In		Patch 1	
A01A	I/O Panel: MIC-1 In		CABLE REEL: Mic-1	
A02	I/O Panel: MIC-2 In		Patch 2	
A02A	I/O Panel: MIC-2 In		CABLE REEL: Mic-2	
A03	I/O Panel: MIC-3 In		Patch 3	
A04	I/O Panel: MIC-4 In		Patch 4	
A04A	I/O Panel: MIC-4 In		RACK #4 JACK	
A05	VCR-1: ANLG OUT-L		Patch 5	
A06	VCR-1: ANLG OUT-R		Patch 6	
A07	VCR-2: ANLG OUT-L		Patch 7	
A08	VCR-2: ANLG OUT-R		Patch 8	
A09	Mixer: AUX-L OUT		Patch 9	
A10	Mixer: AUX-R OUT		Patch 10	
A11	Mixer: Out-1 L		Patch 11	
A12	Mixer: Out-1 R		Patch 12	
A13	VCR-1: ANLG OUT-L		Patch 13	
A14	VCR-1: ANLG OUT-R		Patch 14	
A15	VCR-2: ANLG OUT-L		Patch 15	
A16	VCR-2: ANLG OUT-R		Patch 16	
A17	Mixer: OSC L		Patch 17	
A18	Mixer: OSC R		Patch 18	
A19	Mixer: Out-2 L		Patch 19	
A20	Mixer: Out-2 R+B69		Patch 20	
A21	Switcher: PVW-L Out		Patch 21	
A22	Switcher: PVW-R Out		Patch 22	
A23	ADA-1: PGM-L Out-1		Patch 23	
A24	ADA-2: PGM-R Out-1		Patch 24	
A25	ADA-3: PVW-L Out-1		Patch 25	
A26	ADA-4: PVW-R Out-1		Patch 26	
A27	ELX 1B: Out		Patch 27	
A28	STA-3 SUM Out		Patch 28	
A29	STA-1		Patch 29	
A29A	Demod: Out-L		STA-1	
A30	STA-1		Patch 30	
A30A	Demod: Out-R		STA-1	
A31	I/O Panel: Tie-1		Patch 31	
A32	I/O Panel: Tie-2		Patch 32	
B01	Patch 1		Mixer: Mic-1 In	
B02	Patch 2		Mixer: Mic-2 In	
B03	Patch 3		Mixer: Mic-3 In	
B04	Patch 4		Mixer: Mic-4 In	
B05	Patch 5		Mixer: VCR-1 L In	
B06	Patch 6		Mixer: VCR-1 R In	
B07	Patch 7		Mixer: VCR-2 L In	
B07A	Patch 7		Mixer: Ext Mon-1 L In	
B08	Patch 8		Mixer: VCR-2 R In	
B08A	Patch 8		Mixer: Ext Mon-1 R In	

Cable #	From	Rack	To	Rack
B09	Patch 9		Mixer: In-1 L, Black	
B10	Patch 10		Mixer: In-1 R, Black	
B11	Patch 11		Mixer: In-2 L, I/O-1	
B11A	Patch 11		Mixer: In-3 L, I/O-2	
B11B	Patch 11		Mixer: In-4 L, I/O-3	
B11C	Patch 11		Mixer: In-5 L, Mast Cam	
B12	Patch 12		Mixer: In-2 R, I/O-1	
B12A	Patch 12		Mixer: In-3 R, I/O-2	
B12B	Patch 12		Mixer: In-4 R, I/O-3	
B12C	Patch 12		Mixer: In-5 R, Mast Cam	
B13	Patch 13		Mixer: In-6 L, VCR-1	
B14	Patch 14		Mixer: In-6 R, VCR-1	
B15	Patch 15		Mixer: In-7 L, VCR-2	
B16	Patch 16		Mixer: In-7 R, VCR-2	
B17	Patch 17		Mixer: In-8 L, Test	
B18	Patch 18		Mixer: In-8 R, Test	
B19	Patch 19		ADA-1: In	
B20	Patch 20		ADA-2: In	
B21	Patch 21		ADA-3: In	
B22	Patch 22		ADA-4: In	
B23	Patch 23		Microwave Cont. 2 Ghz In-1	
B23A	Patch 23		Microwave Cont. 2 Ghz In-2	
B24	Patch 24		Microwave Cont. 7 Ghz In-1	
B24A	Patch 24		Microwave Cont. 7 Ghz In-2	
B25	Patch 25		VCR-1: In L	
B26	Patch 26		VCR-1: In R	
B27	Patch 27		Transformer BAL to UNBAL	
B28	Patch 28		ELX 1B In-4 Mixer AUX	
B29	Patch 29		VCR-2: In L	
B30	Patch 30		VCR-2: In R	
B31	Patch 31		I/O Panel: Tie-3	
B32	Patch 32		I/O Panel: Tie-4	
DR01	ADA-1: PGM-L Out-2		Resistive Sum: In	
DR02	ADA-2: PGM-R Out-2		Resistive Sum: In	
DR03	ADA-3: PVW-L Out-2		Resistive Sum: In	
DR04	ADA-4: PVW-R Out-2		Resistive Sum: In	
DR05	SAT-1		Anchor Speaker/AMP	
DR06				
DR07	Resistive Sum: In		STA-4 Meter Level Set	
DR07A	STA-4 Meter Level Set		Mixer: Ext Mon-2 L	
DR08	Resistive Sum: In		STA-4 Meter Level Set	
DR08A	STA-4 Meter Level Set		Mixer: Ext Mon-2 R	
DR09	Mixer: AUX-L		STA-3 SUM	
DR10	Mixer: AUX-R		STA-3 SUM	
DR11	STA-1		STA-2 SUM	
DR12	STA-1		STA-2 SUM	
DR13	STA-2 SUM		ELX 1B In-3 Demod	

Cable #	From	Rack	To	Rack
DR14	Cell Phone-1		ELX 1B In-1 Cell-1	
DR15	Scaner		ELX 1B In-2 Scaner	
DR16				
DR17	ADA-1: PGM-L Out-3		I/O Panel: PGM Out-1 L	
DR18	ADA-2: PGM-R Out-3		I/O Panel: PGM Out-1 R	
DR19	ADA-1: PGM-L Out-4		I/O Panel: PGM Out-2 L	
DR20	ADA-2: PGM-R Out-4		I/O Panel: PGM Out-2 R	
DR21	ADA-1: PGM-L Out-5		I/O Panel: PGM Out-3 L	
DR22	ADA-2: PGM-R Out-5		I/O Panel: PGM Out-3 R	
DR23	ADA-1: PGM-L Out-6		I/O Panel: PGM Out-4 L	
DR24	ADA-2: PGM-R Out-6		I/O Panel: PGM Out-4 R	
DR25	ADA-1: PGM-L Out-7		I/O Panel: PGM Out-5 L	
DR26	ADA-2: PGM-R Out-7		I/O Panel: PGM Out-5 R	
DR27	ADA-3: PVW-L Out-3		I/O Panel: PVW Out-1 L	
DR28	ADA-4: PVW-R Out-3		I/O Panel: PVW Out-1 R	
DR29	ADA-3: PVW-L Out-4		I/O Panel: PVW Out-2 L	
DR30	ADA-4: PVW-R Out-4		I/O Panel: PVW Out-2 R	
DR31	VCR-1: Main Out		Fostex Speaker	
DR32	VCR-2: Main Out		Fostex Speaker	
MON1	Mixer: Mon-L		Monitor D-45 In-L	
MON2	Mixer: Mon-R		Monitor D-45 In-R	
PL-1	PS-15 Out-WET		MRT-327: In-PL	
PL-1A	MRT-327: In-PL Loop		I/O Panel: RTS Out-1&2	
PL-1B	I/O Panel: RTS Out-1&2		Cable Reel: RTS	
PL-2	Transformer BAL to UNBAL		MCE-325: AUX CONN.	
TELCO-1	I/O Panel: Telco-1		Under Table Jack-1	
TELCO-2	I/O Panel: Telco-2		Under Table Jack-2	
TXA1	Microwavw Cont. 2 Ghz Out-1		To Mast and Antenna Mounded PA's	
TXA2	Microwavw Cont. 2 Ghz Out-2		To Mast and Antenna Mounded PA's	
TXA3	Microwavw Cont. 7 Ghz Out-1		To Mast and Antenna Mounded PA's	
TXA4	Microwavw Cont. 7 Ghz Out-2		To Mast and Antenna Mounded PA's	